UNIVERSITÉ DE GENÈVE

Facilitating renewables by energy storage

SWISSOLAR – National Photovoltaics Conference
Symposium Thermal Energy Storage
- Exchanging and networking on Thermal Energy Storage

Bern, 2 July 2021

Prof. Martin K. Patel, Alejandro Pena-Bello, Arthur Rinaldi, Dr. David Parra
Chair for Energy Efficiency
Institute for Environmental Sciences (ISE) and
Dpt. F.-A. Forel for environmental and aquatic sciences (DEFSE)
Faculty of Science
University of Geneva
martin.patel@unige.ch
Tel.: +41 (0) 22 379 0658

sccer | future energy efficient buildings & districts

EFFICIENCY OF INDUSTRIAL PROCESSES

Storage Swiss Competence Center for Energy Research

SCCER CREST Swiss Competence Centers for Energy Research Competence Center for Research in Energy, Society and Transition

1

1

UNIVERSITÉ DE GENÈVE

Content

- Thermal storage vs. battery for SFH with PV and HP – *Owner perspective*
- PV and batteries – *Owner vs. system perspective*
- PV + batteries for electrification of heating sector – *System perspective*
- Conclusions

2

2

Thermal storage vs. battery for SFH with PV and HP – Owner perspective

UNIVERSITÉ DE GENÈVE

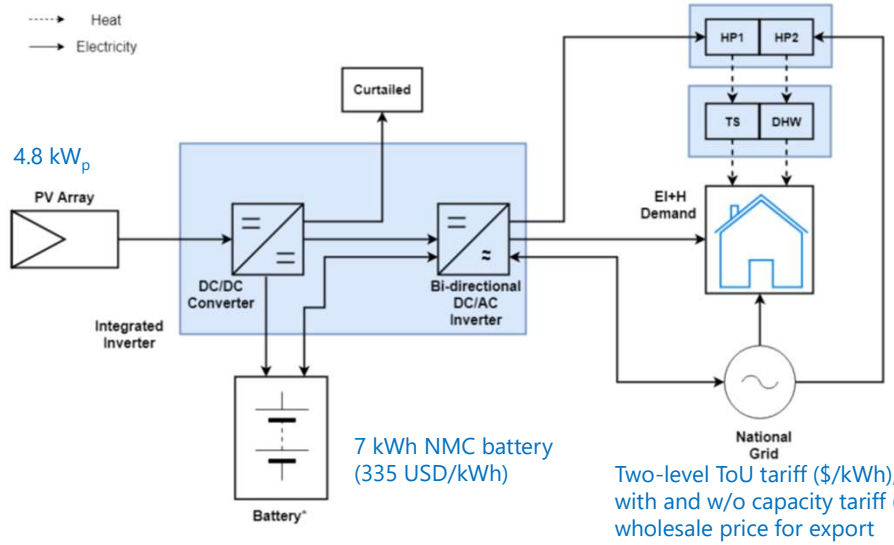

TS: equiv. to 1500 l water at ΔT=10 K, i.e. 17.5 kWh

DHW: 200 l, ΔT=20, i.e. 4.7 kWh

Buildings (SFH):
100 kWh/m²/a
45 kWh/m²/a
15 kWh/m²/a,
2 hours of intrinsic thermal flexibility

7 kWh NMC battery (335 USD/kWh)

Two-level ToU tariff ($/kWh), with and w/o capacity tariff ($/kW), wholesale price for export

- Minimization of operational cost under perfect foresight (→ min. LC)

A. Pena-Bello et al., En. Convers. and Mgmt, 2021

3

3

Thermal storage vs. battery for SFH with PV and HP – Owner perspective

UNIVERSITÉ DE GENÈVE

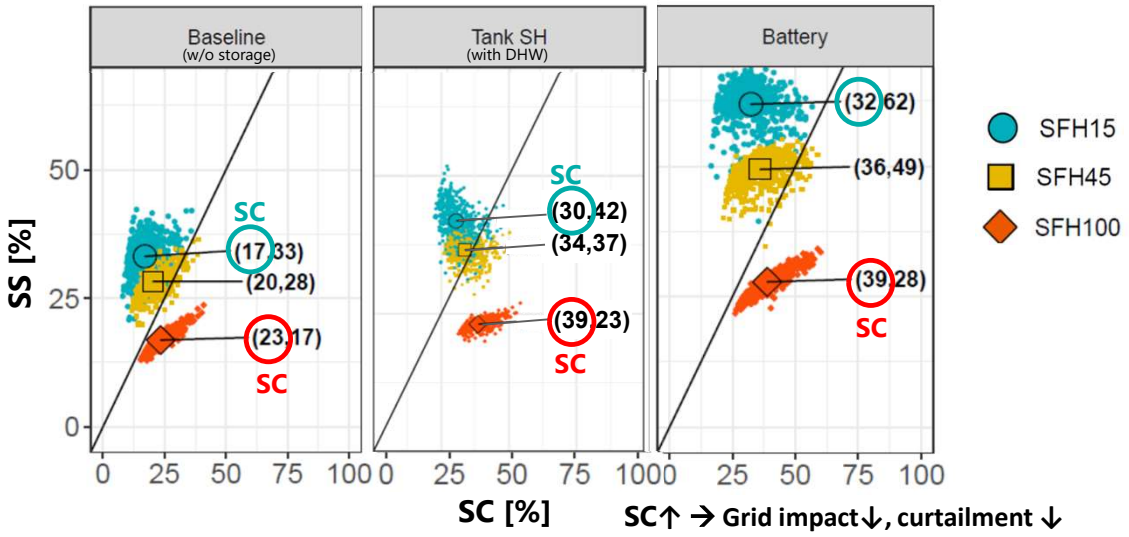

SC↑ → Grid impact↓, curtailment ↓

A. Pena-Bello et al., En. Convers. and Mgmt, 2021

4

4

Thermal storage vs. battery for SFH with PV and HP – Owner perspective

UNIVERSITÉ DE GENÈVE

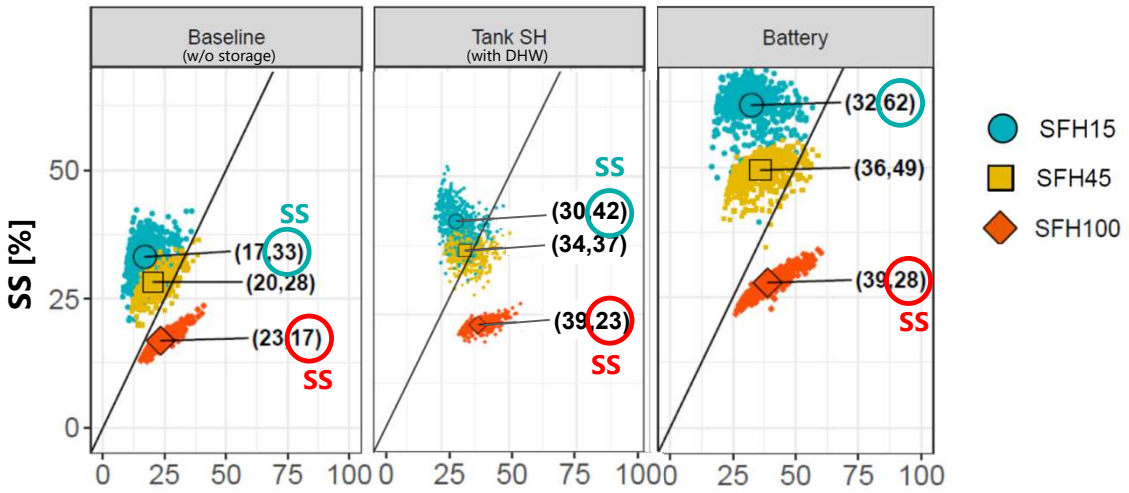

SC↑ → Grid impact↓, curtailment ↓

SS ↑ → Grid dependency↓, el. bill ↓

A. Pena-Bello et al., En. Convers. and Mgmt, 2021

5

5

Thermal storage vs. battery for SFH with PV and HP – Owner perspective

UNIVERSITÉ DE GENÈVE

- TS (with DHW) and battery improve SS and SC
  - SC: TS and battery comparable
  - SS: higher for battery (esp. high for very efficient bdlgs)
  - (TS without DHW: less attractive)
- Levelized cost (includes cost of PV, HP & storage):
  - TS decreases LC while battery (currently) increases it
  - Total Levelized cost tends to decrease by combined installation of TS and battery
- Peak flow (maximum of import/export kW) as indicator for grid friendliness
  - Capacity tariff reduces peak flow across the board
  - In SFH100, battery in combination with capacity tariff reduces peak flow more markedly than heat storage

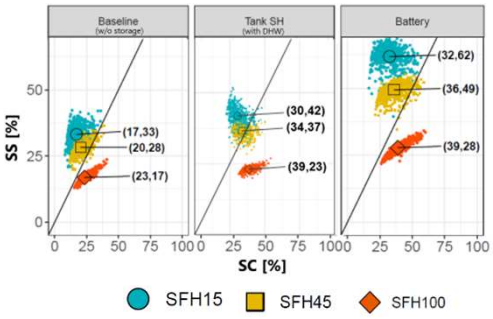

Note: PhD thesis by J. Holweger/EPFL
** similar findings (SS and SC; capacity tariff)*
** in spite of different configuration*

A. Pena-Bello et al., En. Convers. and Mgmt, 2021

6

6

Thermal storage vs. battery for SFH with PV and HP – Owner perspective

UNIVERSITÉ DE GENÈVE

Battery

+ significant improvement of SC and SS
+ good controllability
+ peak flow can be reduced
-- clearly more expensive: increases LCOE by 4-8 cents/kWh; but…

Heat storage

+ cost-effective (here: reduces LCOE by 2-3 cents/kWh)
+/o significant improvement of SC; somewhat lower than battery for SS
o peak flow practically unchanged
-- installation much more challenging: space, temp. levels, complexity but…
-- monitoring & control much error-prone

A. Pena-Bello et al., En. Convers. and Mgmt, 2021

7

7

PV + batteries - SFH owner perspective vs. system perspective

UNIVERSITÉ DE GENÈVE

- How does the operation of PV-coupled battery systems influence the cost of power supply?
- Method
  - Market/dispatch optimization model of the Swiss (plus neighboring countries') power supply (GRIMSEL model)
  - Multiple SFH with PV and batteries
  - Operate SFH battery
    * optimally for SFH owner
    * optimally for total system
  - No grid constraints
- Outcome:
  - Battery operation from the household perspective can increase the system cost.
  - Time-of-use tariffs mitigate this effect to some extent.

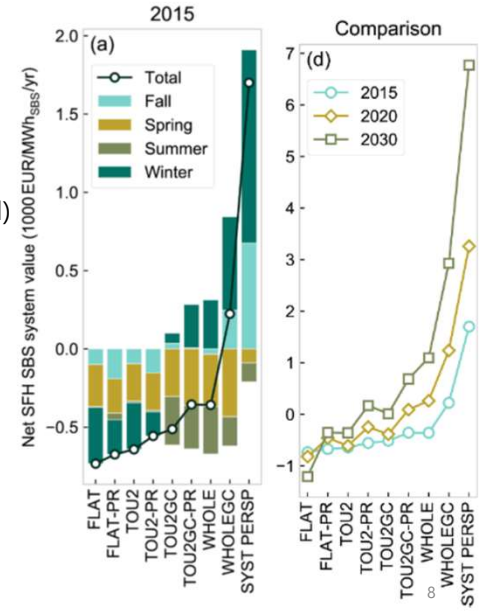

M. Soini et al., J. of En. Storage, 2020

8

8

PV + batteries for electrific. of heating sector – system perspective

UNIVERSITÉ DE GENÈVE

- Which PV and energy storage investments are needed for decarbonising the *residential* heating sector in CH? Which type of sectors and where located?
- Method
  - GRIMSEL model, minimum system cost (social planner approach)
  - Optimal PV and battery (Li-ion or VRFB) deployment for
    * different HP deployment scenarios
    * building retrofit
- Outcome
  - For BAU HP deployment (57% by 2050) and BAU retrofit: optimally 28 GWp of PV + 34 GWh for LiB and 8 GWh for VRFB
  - For 100% PAC and BAU retrofit: optimally 29 GWp of PV + 42 GWh for LiB and 12 GWh for VRFB
  - Storage esp. in suburban areas with high heating demand; low need in urban areas

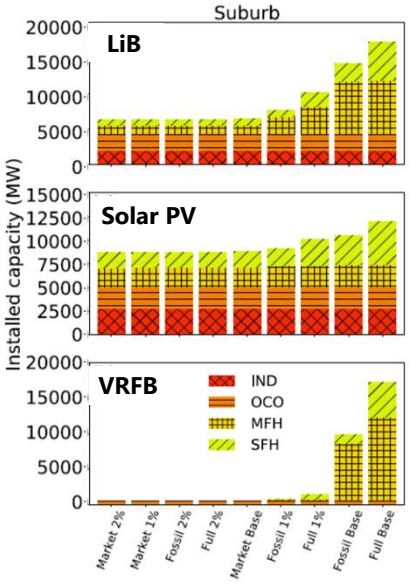

A. Rinaldi et al., Applied Energy, 2021

9

9

Conclusions

UNIVERSITÉ DE GENÈVE

- TS and batteries both facilitate renewables
  - different advantages and disadvantages
  - further development required for both TS and batteries
  - from daily to longer time scales
  - operational choices; tariffs and/or regulation
- TS and batteries can reduce impact on electric grid
  - trade-off with grid reinforcement
  - tariffs and/or regulation
- Heat pumps = "Must have" and most cost-effective
  - for decentralized systems and also for thermal grids
- Energy retrofit = Continues to be high priority
  - need to accelerate
- Further system configurations and in other sectors

10

10

1. Pena-Bello, A.; Schuetz, P.; Berger, M.; Worlitschek, J.; Patel, M.K.; Parra, D: Decarbonizing heat with PV-coupled heat pumps supported by electricity and heat storage: impacts and trade-offs for prosumers and the grid. Submitted to Energy Conversion and Management 240, 2021
2. Streicher, K.N.; Berger, M.; Panos, E.; Narula, K.; Soini, M.C.; Patel, M.K.: Optimal building retrofit pathways considering stock dynamics and climate change impacts. Energy Policy, Volume 152, 2021
3. Gupta, R., Pena-Bello, A.; Streicher, K.N.; Roduner, C.; Thöni, D.; Patel, M.K., Parra, D: Spatial analysis of distribution grid capacity and costs to enable massive deployment of PV, electric mobility and electric heating. Applied Energy, Volume 287, 2021
4. Rinaldi, A.; Soini, M.C.; Streicher, K.; Patel, M.K.; Parra, D.: Decarbonising heat with optimal PV and storage investments: A detailed sector coupling modelling framework with flexible heat pump operation. Applied Energy 282, 2021
5. Yilmaz, S.; Xu, X.; Cabrera, D.; Chanez, C.; Cuony, P.; Patel, M.K.: Analysis of demand-side response preferences regarding electricity tariffs and direct load control: Key findings from a Swiss survey. Energy, Volume 212, 2020
6. Narula, K., de Oliveira Filho, F., Chambers, J.; Patel, M.K.: Simulation and comparative assessment of heating systems with tank thermal energy storage – A Swiss case study. Journal of Energy Storage. 2020
7. Pena-Bello, A.; Barbour, E.; Gonzalez, M.C.; Yilmaz, S.; Patel, M.K.; Parra, D.: How does the electricity demand profile impact the attractiveness of PV-coupled battery systems combining applications? Energies, Volume 13, Issue 15, 2020
8. Soini, M.C.; Parra, D.; Patel, M.K.: Impact of prosumer battery operation on the cost of power supply. Journal of Energy Storage, 2020
9. Gupta, R., Soini, M.C., Patel, M.K., Parra, D: Levelized cost of solar photovoltaics and wind supported by storage technologies to supply firm electricity. Journal of Energy Storage, 2020
10. Soini, M.C.; Parra, D.; Patel, M.K.: Does bulk electricity storage assist wind and solar in replacing dispatchable power production? Energy Economics 85, 2020

Thank you!

UNIVERSITÉ DE GENÈVE

sccer future energy efficient buildings & districts

EFFICIENCY OF INDUSTRIAL PROCESSES

Storage Swiss Competence Center for Energy Research

SCCER CREST Swiss Competence Centers for Energy Research Competence Center for Research in Energy, Society and Transition

11

11

UNIVERSITÉ DE GENÈVE

Additional slides

12

12

Thermal storage vs. battery storage for SFH with PV and HP

UNIVERSITÉ DE GENÈVE

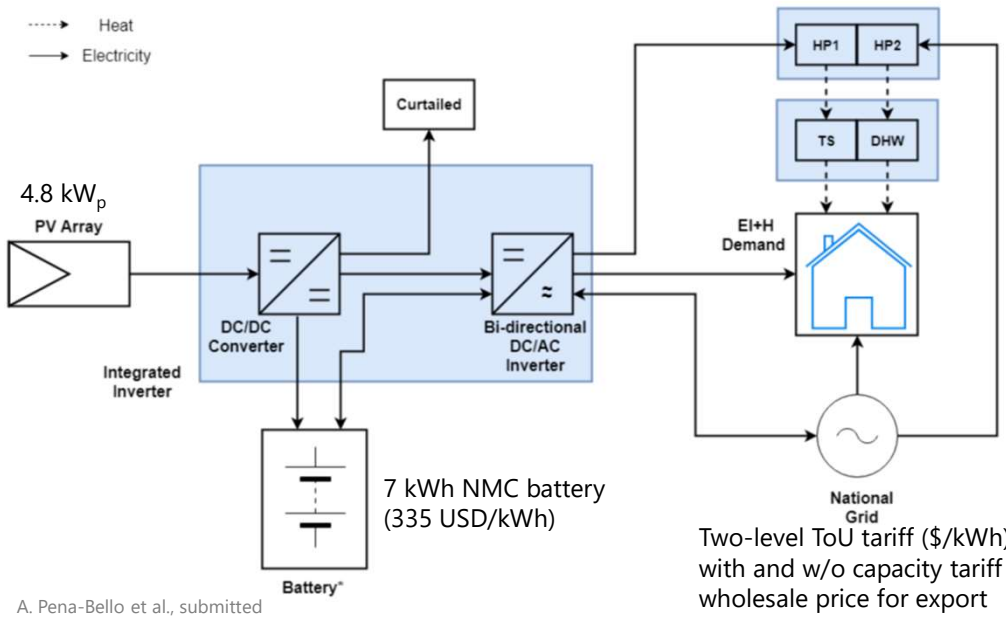

7 kWh NMC battery (335 USD/kWh)

TS: equiv. to 1500 l water at ΔT=10 K, i.e. 17.5 kWh

DHW: 200 l, ΔT=20, i.e. 4.7 kWh

Buildings (SFH):
100 kWh/m²/a
45 kWh/m²/a
15 kWh/m²/a,
2 hours of intrinsic thermal flexibility

Two-level ToU tariff ($/kWh), with and w/o capacity tariff ($/kW), wholesale price for export

A. Pena-Bello et al., submitted

13

13

Thermal storage vs. battery storage for SFH with PV and HP

UNIVERSITÉ DE GENÈVE

Heat Pump	SFH15	SFH45	SFH100
Required heat at the design point (kW_{th})	2.4	4.9	10.6
Supply temperature at the design point (°C)	35	35	50
Temperature difference at the design point (K)[a]	46	46	61
Generated heat demand at the design point (kW_{th})	4	4.8	9.7
HP Thermal capacity (kW_{th})	4	6	16
Working fluid	410a	410a	410a
Maximum electric demand at the design point(kW_{el})	1.7	2	6.6
Backup heater[b](kW_{th})	2	4	4
Space heating storage system	**SFH15**	**SFH45**	**SFH100**
Type of storage	Existing[c]	Existing[c]	New[d]
Specific capacity of the heat release of storage (kJ/K)	40000	40000	6300
Maximum ΔT (K)	1.5	1.5	10
Active building storage capacity based on possible temperature difference (kJ)	60000	60000	63000
Equivalent water capacity @ 10 K ΔT (l)	≈ 1500	≈ 1500	1500
DHW storage system	**SFH15**	**SFH45**	**SFH100**
Maximum ΔT (K)	20	20	20
Storage capacity based on temperature difference (kJ)	16800	16800	16800
Water capacity (l)	200	200	200

Pena-Bello et al., submitted

14

14

Thermal storage vs. battery storage for SFH with PV and HP

UNIVERSITÉ DE GENÈVE

Table 4: CAPEX (USD) including replacements for the various technologies included in this study depending on the type of house. Detailed values are presented in Appendix A.1

Device	Size	SFH15	SFH45	SFH100	Reference
PV	4.8 [kW_p]	10360	10360	10360	[42]
Heat pump	4/6/16 [kW_{th}]	10300	15500	41200	[39]
Battery[a]	7 [kWh]	12120	13180	13280	[41]
Tank SH	17.4 [kWh]	0[b]	0[b]	1790	[39]
Tank DHW	4.7 [kWh]	960	960	960	[39]

a Average values to account aging.
b The concrete of the floors and the heating water content are used as existing heat storage and thus no additional costs are considered.

Pena-Bello et al., submitted

15

15

Thermal storage vs. battery storage for SFH with PV and HP

UNIVERSITÉ DE GENÈVE

Indicator	PV-coupled heat pumps (baseline)	PV-coupled heat pumps with batteries	PV-coupled heat pumps with thermal storage	PV-coupled heat pumps with thermal storage & DHW
LCOES (USD/kWh)	0.55-0.71	0.6-0.79	0-53-0.68	0.48-0.52
Peak flow (kW_{el})	4.6-8.9	3.8-7.7	4.6-7.7	4.6-9.6
Self-consumption (%)	17-23	32-39	19-29	30-39
Self-sufficiency (%)	17-33	28-62	20-36	23-42

Source: Pena-Bello et al., submitted

16

16